Reg. No. | | | | | | | | | |

Question Paper Code : 12805

B.E / B.TECH DEGREE EXAMINATION, MAY / JUNE 2017

Third Semester

Common to B.E – Computer Science and Engineering & B.Tech – Information Technology

15CS302 – DIGITAL PRINCIPLES AND SYSTEM DESIGN

(Regulations: Mepco – R2015)

Duration: 3 Hours Max. : 100 Marks

Answer ALL Questions

PART A – (10 × 2 = 20 Marks)

1. Add the following decimals 60 and 25 using Excess-3 code.
2. Realize XOR gate using only NAND gates.
3. Compare and contrast Combinational circuit and Sequential circuits.
4. Distinguish between a decoder and a demultiplexer.
5. Define ASIC.
6. Define dynamic RAM.
7. Write the characteristics table and equation of JK flip flop.
8. List few applications of shift registers.
9. When does race condition occur?
10. Compare and contrast synchronous and asynchronous sequential circuits.

PART B – (5 × 16 = 80 Marks)

11. a) i. Realize the function F = (A + B) (A' + C) (B + D) by using (A) basic gates, (B) NAND gates only, (C) NOR gates only. (8 Marks)

11. a) ii. Using K-Map, obtain the minimal sum of the products for the function

F(A,B,C,D,E)=∑(0,2,5,7,9,11,13,15,16,18,21,23,25,27,29,31) (8 Marks)

OR

11. b) Obtain the minimal sum of the products for the function F (A,B,C,D) = ∑(1, 2, 3, 7, 8, 9, 10, 11, 14, 15) by the Quine-McClusky method and implement the resultant function using NAND only logic. (16 Marks)

12. a) i. Design a combinational circuit that converts 2421 code to 84-2-1 code and implement it using basic gates. (12 Marks)

12. a) ii. Write the behavioral modeling HDL description of full adder circuit. (4 Marks)

OR

12. b) i. Implement the following boolean expression

F(A, B, C, D) = ∑(0, 3, 7, 9, 11, 12, 14)

using A) 8:1 multiplexer and external gates.

B) 4:1 multiplexer and external gates (12 Marks)

12. b) ii. Write the dataflow modeling HDL description of octal to binary encoder circuit. (4 Marks)

13. a) i. Implement the following Boolean functions using a 3 × 4 × 2 PLA.

F1 (A, B, C) = ∑(3, 5, 6, 7) and

F2 (A, B, C) = ∑(0, 2, 4, 7). (8 Marks)

13. a) ii. Explain in detail about Multiplexed display systems. (8 Marks)

OR

13. b) i. Design a BCD to Excess-3 code converter using a suitable PROM. (8 Marks)

13. b) ii. Explain in detail about error detection and correction with suitable examples. (8 Marks)

14. a) Design a synchronous MOD-8 counter using J-K Flip-Flops. (16 Marks)

OR

14. b) i. For the sequential circuit shown below,

A. Derive the state table.

B. Construct the state diagram.

C. Explain the function that this circuit performs.

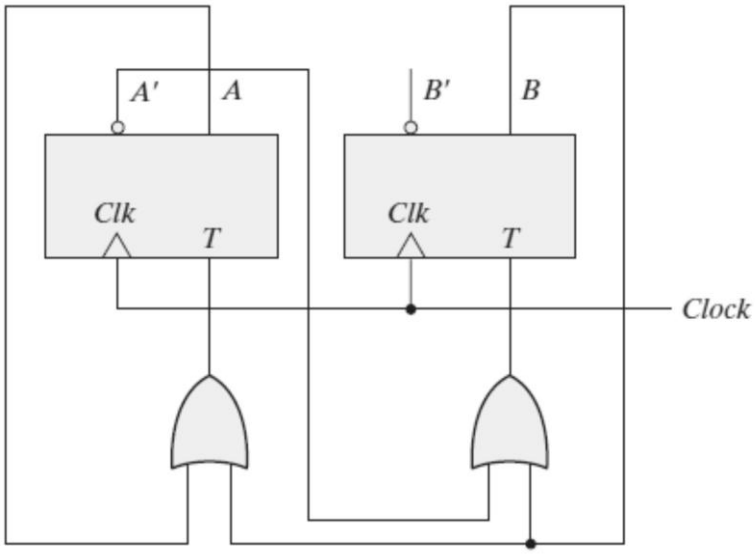

(10 Marks)

14. b) ii. Write the HDL description for Parallel-In Parallel-Out Shift register. (6 Marks)

15. a) i. An asynchronous sequential circuit has two internal states and one output. The excitation and output functions describing the circuit are as follows:

$$Y_1 = x_1x_2 + x_1y_2' + x_2'y_1$$

$$Y_2 = x_2 + x_1y_1'y_2 + x_1'y_1$$

$$z = x_2 + y_1$$

A. Draw the logic diagram of the circuit

B. Derive the transition table and output map

C. Obtain a flow table for the circuit (10 Marks)

15. a) ii. Find a circuit that has no static hazards and implement the Boolean function.

$F(A, B, C, D) = \sum(0, 2, 6, 7, 8, 10, 12)$ (6 Marks)

OR

15. b) Design an asynchronous sequential circuit with two inputs and x_1 and x_2 and one output Z. Initially, both inputs and outputs are equal to 0. When x_1 or x_2 becomes 1, the output Z becomes 1. When the second input also becomes 1, the output changes to 0. The output stays at 0 until the circuit goes back to the initial state. (16 Marks)